FOR NOTES REFRER TO:
DWG 002-C

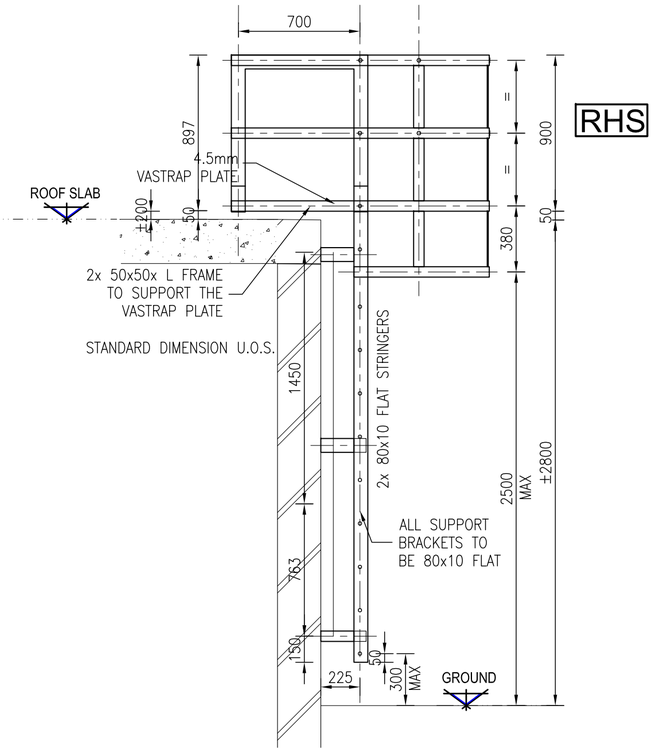

TYPICAL ELEVATION
SCALE 1:25

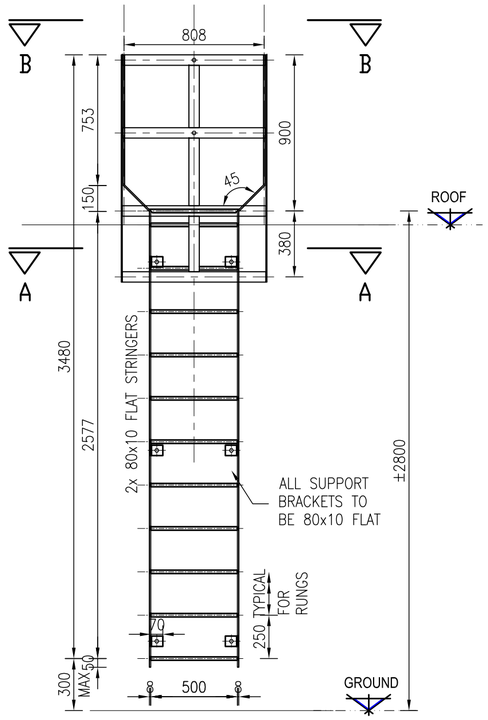

RHS ELEVATION
SCALE 1:25

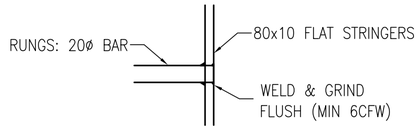

TYPICAL RUNGS SECTION
SCALE 1:25

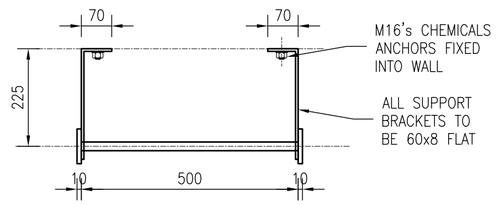

TYPICAL SUPPORTING BRACKETS DETAIL
SCALE 1:10

KEY PLAN

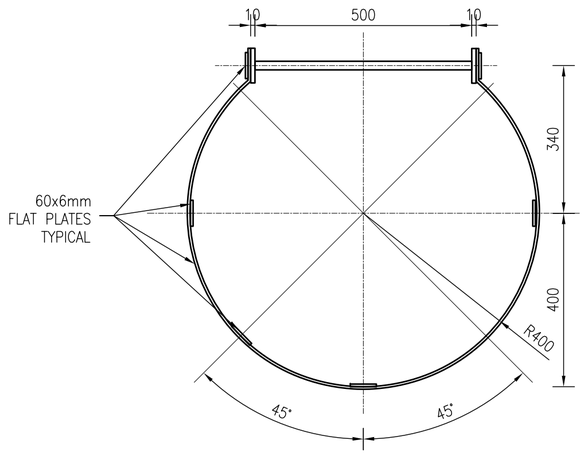

SECTION A-A
SCALE 1:10

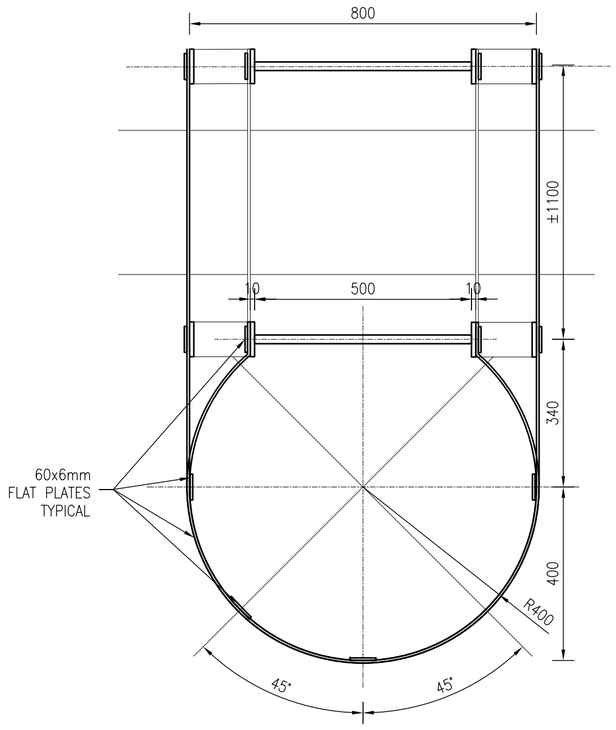

SECTION B-B
SCALE 1:10

TENDER

NO	DATE	REVISION
T	12. 03. 24	ISSUED FOR TENDER

DESIGNER C. GROBLER	12. 03. 24	
DETAILER W. K. OLIVER	12. 03. 24	A2

advisory services
Civil Engineering • Structural Engineering • Project Management
Tel: +(27) 82 923 8349 andre@teacadvisory.co.za
35 Sebi Sands Crescent, Moreleta Park, Pretoria, 0181
P.O. Box 11373, Erasmuskloof, 0048. Co Reg: 2018/582047/07

PROJECT
CSIR
BUILDING 18

DRAWING TITLE
CAT LADDER 18B
LAYOUT & DETAILS

PROJECT NO	DRAWING No	REVISION
24208	018-B	T

THESE DRAWINGS ARE TO BE READ IN CONJUNCTION WITH ALL THE RELEVANT CONSULTANTS' DRAWINGS. ALL DIMENSIONS ARE TO BE READ AND NOT SCALED. ANY DISCREPANCIES ARE TO BE REPORTED TO THE PRINCIPAL AGENT IMMEDIATELY. THESE DRAWINGS ENJOY A COPYRIGHT WHICH VESTS IN CG STRUCTURAL DESIGN SERVICES UNLESS OTHERWISE AGREED TO IN WRITING. THESE DRAWINGS MAY NOT BE REPRODUCED OR TRANSMITTED IN ANY FORM OR BY ANY MEANS WHATSOEVER TO ANY PERSON WITHOUT THE WRITTEN PERMISSION OF THE COPYRIGHT HOLDER.